AKSESUAR LİSTESİ
ATTACHMENT LİST

Pasific Home

AKSESUAR LİSTESİ
ATTACHMENT LİST

METALLO SERİSİ / METALLO SERIES

SANDALF MASA

ÜRÜN KODU/PRODUCT CODE :
32 TRZ-METALLO

PAKET KODU / PACKIN CODE:

1. ST- SANDALF MASA 1-(1)

AKSESUARLAR / ATTACHMENT

İSİM NAME	3.5*30 Vida demir için Screw for ıron	demir ayak İron leg				
ŞEKİL SHAPE	164 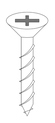	980				
ADET TOTAL	9	3				

İSİM NAME						
ŞEKİL SHAPE						

İSİM NAME						
ŞEKİL SHAPE						
ADET TOTAL						

İSİM NAME						
ŞEKİL SHAPE						
ADET TOTAL						

İSİM NAME						
ŞEKİL SHAPE						
ADET TOTAL						

AKSESUAR LİSTESİ
ATTACHMENT LİST

Pasific Home

AKSESUAR LİSTESİ
ATTACHMENT LİST

METALLO SERİSİ / METALLO SERIES

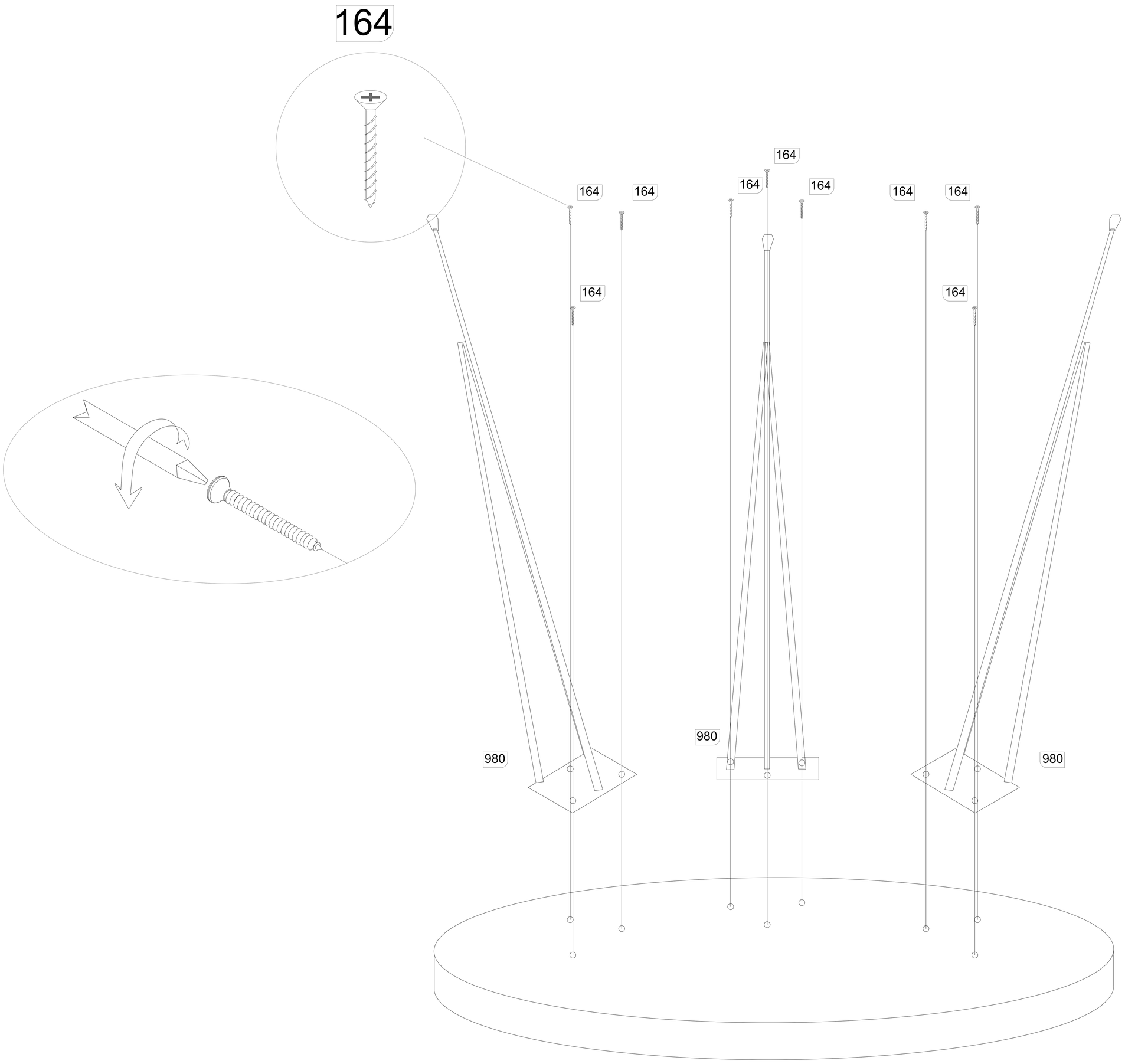

PARÇA / COMPONENT		
KOD CODE	İSİM / NAME	ADET TOTAL
6138	ÜST PANEL TOP PANEL	1

PARÇA / COMPONENT		
KOD CODE	İSİM / NAME	ADET TOTAL